IR add-on module circuit board assembly - Jeffrey La Favre – January 27, 2015

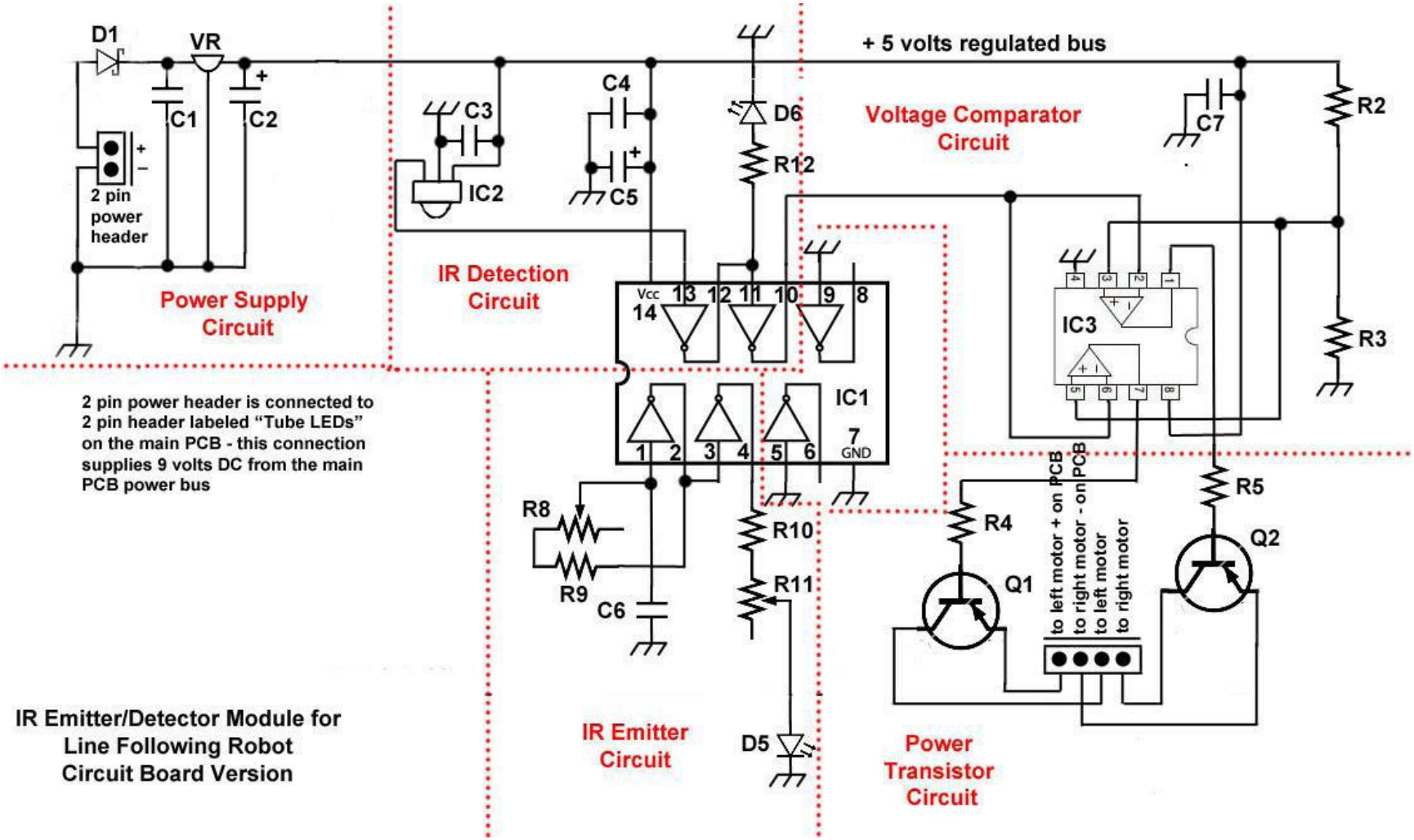

For the main circuits of the line following robot you soldered electronic components on a printed circuit board (PCB). The PCB is an efficient method of assembling components. However, the PCB must be manufactured for a specific electronic project. In the case of the line following robot, the components were purchased as part of a kit, which included the PCB. What do you do when you design your own electronic circuits? You can send the design to a printed circuit board manufacturer, but the cost for just a few boards is expensive. In our case, we will use a different method for assembling the circuits of the IR add-on module, called point-to-point wiring. You will use a circuit board that appears similar to a PCB, but does not contain the copper strips that constitute the printed circuits. Since your circuit board does not have printed circuits, you must use wires to connect the components.

Assembling components using point-to-point wiring is more difficult than assembly on a PCB. It is much easier to make wiring mistakes with point-to-point wiring and it is necessary to take special care to avoid mistakes. I have included many photos in these instructions which will hopefully help prevent wiring mistakes.

The circuit board you will use has the columns and rows of holes numbered, which can be helpful in dealing with a board that has many holes in it. I have drilled additional mounting holes in the board, that match the spacing of the mounting holes on the main PCB of the robot. Unfortunately, I was not careful in drilling the holes, which resulted in differences between boards. Therefore, the numbers for columns and rows on your board may not match those of the photos in these instructions. I would suggest that you concentrate more on how the components are placed on the board relative to each other rather than to a position that matched the numbers you might see in the photos.

I have glued two Molex headers to your board, a two pin header and a four pin header. You will start your wiring at the two pin header, which is the location where power is delivered to the board from the main PCB. If you are confused about a particular wiring step, it may be a good idea to take a look at the wiring schematic provided on the first page.

You should notice that the wiring for this board is slightly different than that for the breadboard project you just completed. In this wiring there are no green LEDs connected to the power transistors (Q1 and Q2). The input and output wiring of the transistors is different. Instead of turning on and off green LEDs, the function of this board will be to turn on and off the MOTORS of the robot. This requires the add-on module board to connect to both the main PCB and motors, so that the add-on can interrupt power to the motors as needed. These connections are made through the 4 pin Molex header on the add-on board. The add-on board also gets its power from the power bus of the main PCB. Therefore, there is no power switch on the add-on board or a power red LED.

1. Insert the Schottky diode (D1) into the board as seen in Figure 1A. Make sure that the silver band of the diode is positioned properly.

2. Turn the board over so that the bottom side is up. Cut a one inch long piece of 22 gauge sold wire and bend a tight circle in one end with a needle nose pliers. Place the end with circle over the positive pin of the two pin header (see arrow at row 9 in Figure 1B – the positive pin is the one in row #9 in photo). Use the needle nose pliers to tighten the wire circle so that is tight around the pin. It is very important that the wire is tightly wound around the pin. Otherwise, when you solder this connection, it may bridge over to the negative pin of the header, which you MUST avoid. After you have tightened the wire around the pin, solder the connection, as seen in Figure 1B.

3. Using a needle nose pliers, wrap the other end of the one inch wire part way around the wire of the Schottky diode (the Schottky diode wire in row #8 in Figure 1B). Then clip off the excess wire and complete the wrapping of the wire around the diode wire. Then solder that connection, as seen in Figure 1C. You have completed your first point-to-point connection between the positive pin of the header to the anode wire of the Schottky diode.

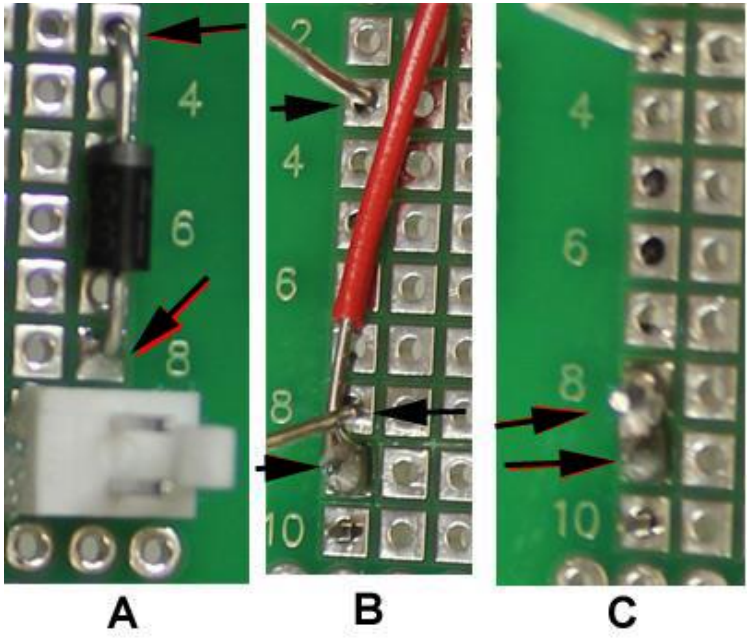

Figure 1

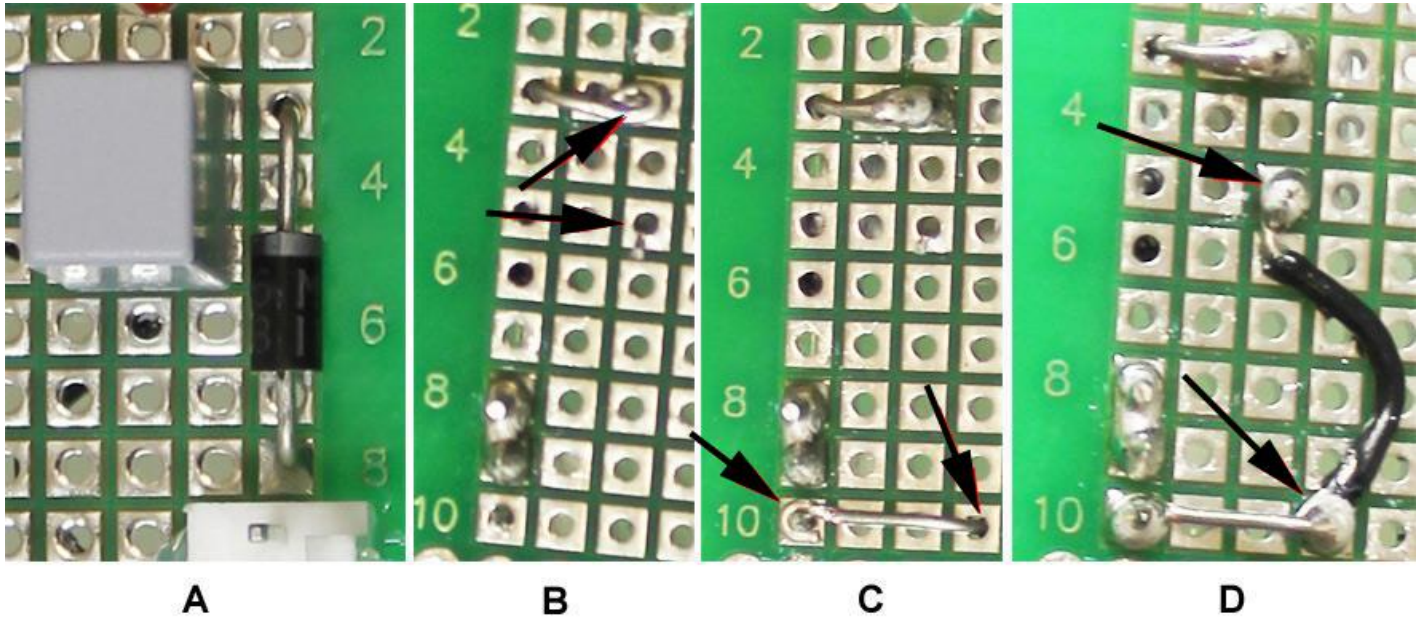

Figure 2

4. Insert capacitor C1 into board as seen in Figure 2A. Both pins of the capacitor should be in the third column of holes from the right side of the board. One of the pins of the capacitor should be in the same row (row #3 in Figure 2 photos) as the cathode wire of the Schottky diode.

5. Turn the circuit board over. The pins of the capacitor are marked with arrows in Figure 2B. Bend the cathode wire of the diode around the capacitor pin as seen in Figure 2B (top arrow). Then solder the connection.

6. Strip the insulation off a piece of black 22 gauge solid wire to expose about one half inch of wire. Then trim the wire to a length of about one inch. Insert the bare wire end into the circuit board from the top, in a hole three columns from the negative pin of the two pin header. Then bend the wire around the negative pin as seen in Figure 2C (arrow on left is the negative pin, arrow on the right is the hole where the wire is inserted in board). Make sure the wire is wrapped tightly around the negative pin. Then solder the connection. This wire serves as a connection point to the negative side of the power supply (negative power bus). The end of the wire containing insulation, on the top side of the board, will be used later to connect IC2 middle pin to the negative power bus.

7. Take a look at Figure 2D. Prepare a black 22 gauge solid wire as seen in the photo. Use this wire to connect from the negative power bus to the free pin of capacitor C1. Solder the connections (see arrows in Figure 2D).

8. Insert the voltage regulator (VR) into the board as seen in Figure 3A (MAKE SURE YOU HAVE THE CORRECT COMPONENT BY CHCKING ITS NUMBER, **LM78L05** – IT LOOKS IDENTICAL TO THE TWO TRANSISTORS USED IN THIS PROJECT – THE ONLY VISIBLE DIFFERENCE IS THE NUMBER LABELED ON THE FLAT FACE). This component has an orientation requirement, so make sure the flat side is facing away from the board edge. The three wires should be in adjacent holes of the second row of holes (in the photo it is the holes in columns 6, 7 and 8).

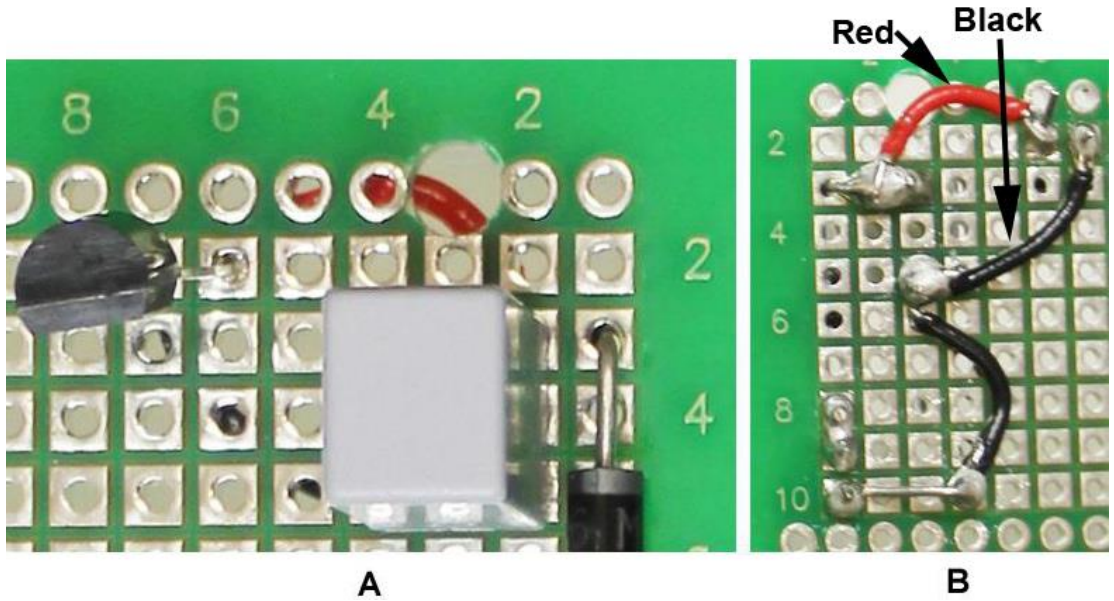

Figure 3

9. Turn the board over. Prepare a red 22 gauge solid wire as seen in Figure . One end of this wire is soldered to the cathode wire of the Schottky diode, the other end to the voltage regulator input wire (there are three wires on the regulator, solder the red wire to the one on the left, the right wire of the regulator is not seen in the photo, only the left and middle wires).

10. Prepare a black 22 gauge solid wire as seen in Figure 3B (the one just below the red wire). One end of this wire is soldered to the negative power bus and the other end to the middle wire of the voltage regulator.

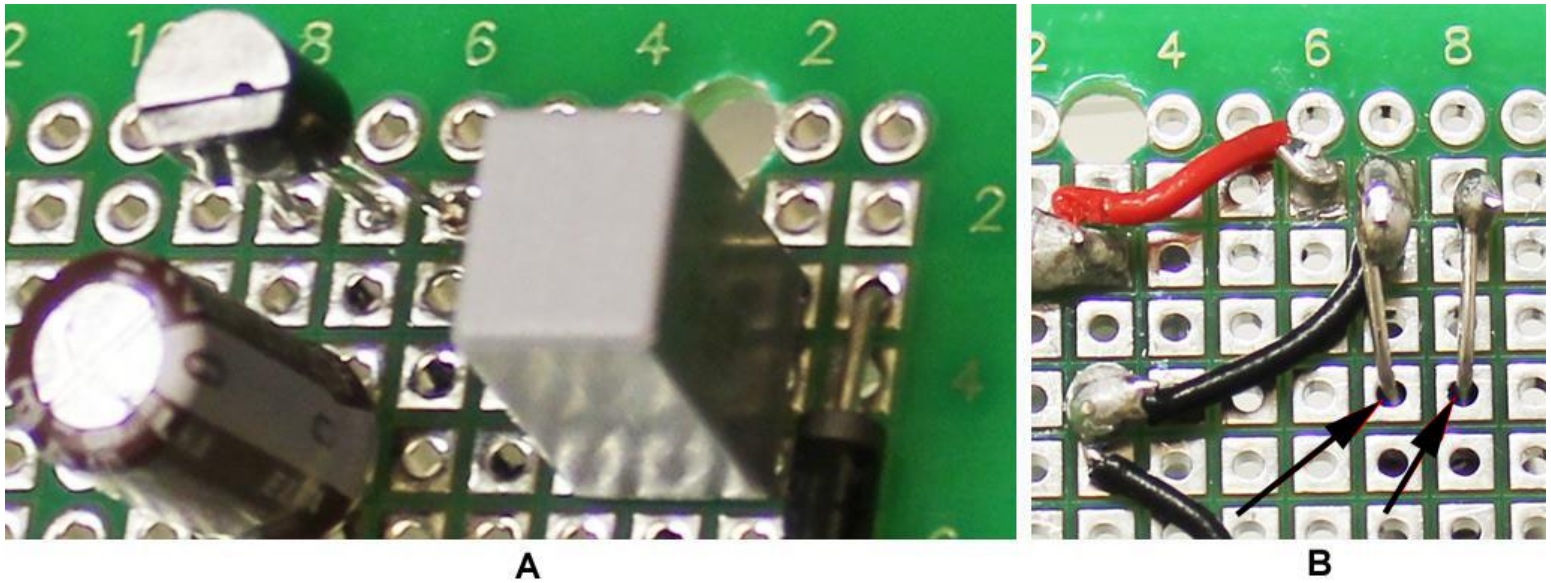

Figure 4

11. Insert capacitor C2 into the board as seen in Figure 4A. This capacitor has an orientation requirement and the negative wire is marked on the side of the capacitor. The negative wire should be inserted into the same column of holes that contains the middle wire of the voltage regulator. The positive wire of the capacitor should be in the same column of holes that contains the output wire of the voltage regulator (column #8 in photo of Figure 4B). With the bottom side of the board up, bend the capacitor wires and solder them as seen in Figure 4B (the arrows mark the capacitor wires).

Congratulations! You have finished wiring the power supply circuit of the IR add-on module. It would be a good idea at this point to check your circuit by connecting it to a 9 volt battery. You want to establish that the circuit is outputting 5 volts regulated. Ask for a 9 volt battery connected to a Molex connector which you can use to supply power to the board. Connect the power. Then use a meter to measure the output of the voltage regulator. On the bottom of the board, touch the black meter probe to the negative power bus and touch the red meter probe to the output wire of the voltage regulator. Your meter should be set to measure 10 volts DC or more (in case you connect to the 9 volt side of regulator by accident). When you connect your meter properly, it should read close to 5.0 volts DC. If so, your circuit is operating properly. Then disconnect the power from the board.

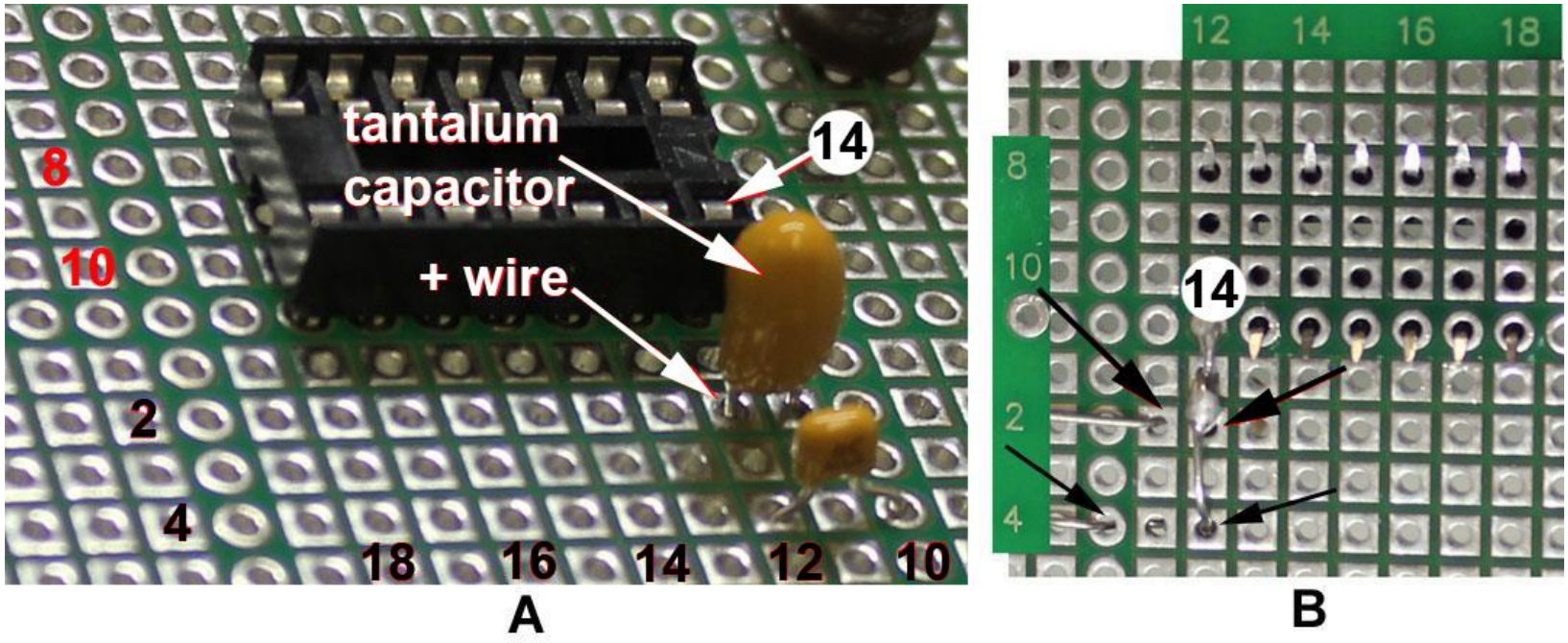

Figure 5

12. It is time now to insert the 14 pin DIP (dual in-line package) socket in the board. The socket should be inserted near the center of the board. Notice that the center of the board is marked by a row of holes that have circular metal pads instead of square pads. Also notice that the center of the board is bounded by two columns of holes with circular metal pads. Take a look at Figure 5A. Pin 14 of the socket is labeled (it is on the end that contains the notch). The row of socket pins containing pin #14 is inserted into the center row of board holes, centered between the two columns of holes with circular metal pads as seen in Figure 5A (capacitor C2 is seen in photo at upper right).

13. While holding the socket so that it will not fall out of the board, turn the board over and bend the socket pins as seen in Figure 5B so that the socket will be held in place.

14. Insert capacitors C4 and C5 into the board as seen in Figure 5A. C5 is the larger, tantalum capacitor, which has an orientation requirement. The positive wire of C5 is marked and must be inserted into the same column of holes that contains pin #14 of the socket. One wire of C4 should also be inserted into the same column of holes. The remaining two wires of the capacitors should be inserted into holes in columns to the right of the column containing socket pin #14.

15. Turn the board over. Bend the positive wire of C5 so that it is on top of pin #14 and trim off the excess wire. Then solder the wire to the pin (see Figure 5B). Make sure you don't apply too much solder. You want to avoid bridging to pin 13 or any other adjacent hole.

16. Bend the wire of C4 that is in the same column as the positive wire of C5, so that the C4 wire touches the C5 wire. Trim off the excess of the C4 wire and solder the wires together (Figure 5B).

17. Prepare a red 22 gauge solid wire as seen in Figure 6. This will supply 5 volts regulated to pin #14 of IC1 socket. One end of the wire should be soldered to the output of the voltage regulator (top arrow) and the other end to pin #14 (bottom arrow).

18. Bend the negative wire of C5 and wrap it around the free wire of C4 (the arrow most to the right in row 4 of Figure 6). Then solder the connection.

19. Prepare a black 22 gauge solid wire to connect between the negative power bus and the free end of the wire of C4 (the connections of the wire are marked with arrows in Figure 6). Solder the connections.

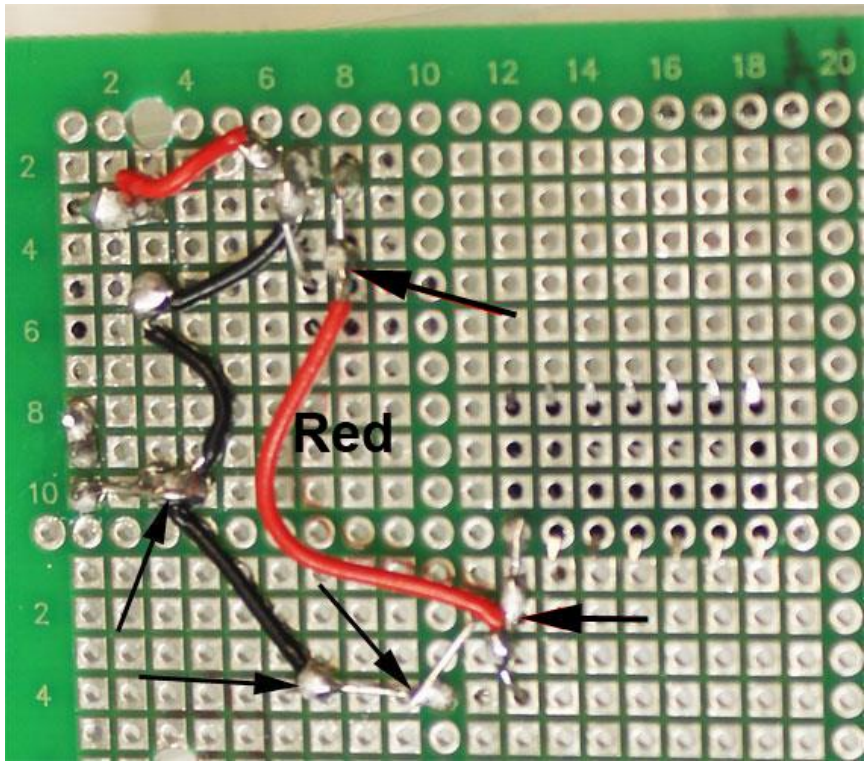

Figure 6

20. Prepare a green 22 gauge solid wire as seen in Figure 7A. One end of the wire is soldered to pin 13 of IC1 socket and the other end is passed through a hole in the same column of holes. You must strip off insulation on the end of the wire so that it can pass through the board. The bare end of this wire is seen in Figure 7B, which is a top view of the board. This wire will serve as a connection point for a wire leading to the output pin of the IR receiver module (IC2).

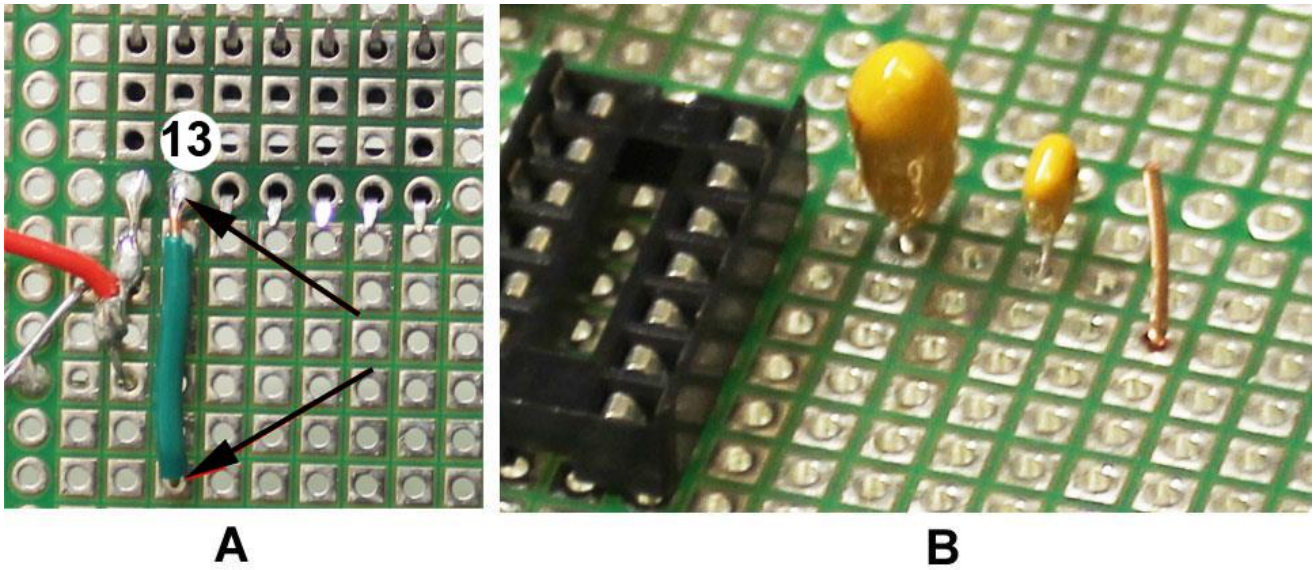

Figure 7

21. Prepare a short piece of bare 22 gauge wire and bend it into a tight U shape so that the ends can be inserted into adjacent holes on the board. Insert the bent wire into the holes in columns that match pins 11 and 12 of the socket (arrows, Figure 8A).

22. While holding the bent wire in place, turn the board over. Bend the ends of the wire over on top of pins 11 and 12 and solder them to the pins (Figure 8B).

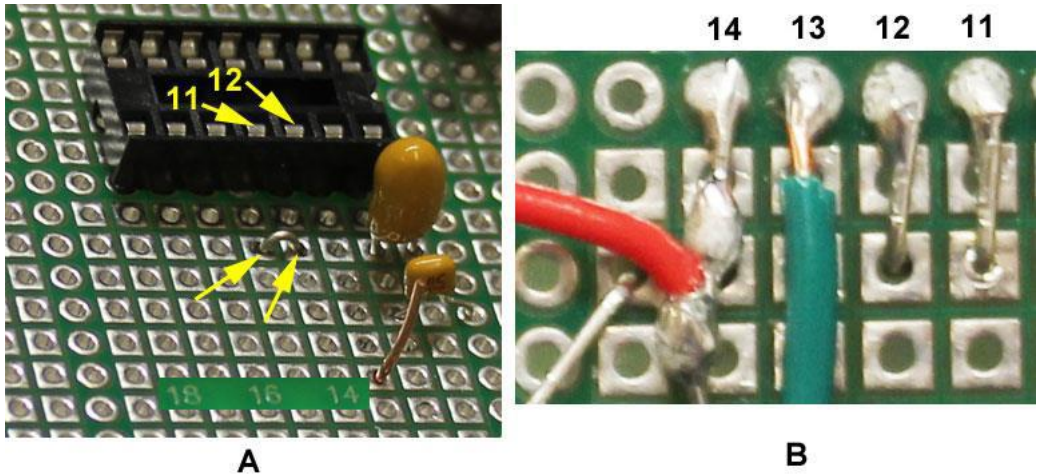

Figure 8

23. Connect R12 (470 Ω) to the board as seen in Figure 9A. One wire connects to the U-shaped wire you just finished installing. The other end is bent to go through a hole in the third row of the board from the bottom as seen in Figure 9A. Then insert red LED D6 with its anode wire (longer) in a hole just below the hole containing the wire of R12 (Figure 9A).

24. Bend the wire leads of D6 slightly so it will not fall out when you turn the board over. Wrap the anode wire of D6 (arrow 2) around R12 wire (arrow 1) and solder together (Figure 9B).

25. Bend the cathode wire (arrow 3) of D6 to the right. Prepare a black 22 gauge solid wire as seen in Figure 9B (bottom wire in photo). Solder one end of this wire to the negative power bus (arrow on left) and the other end to cathode wire of D6 (arrow on right, Figure 9B).

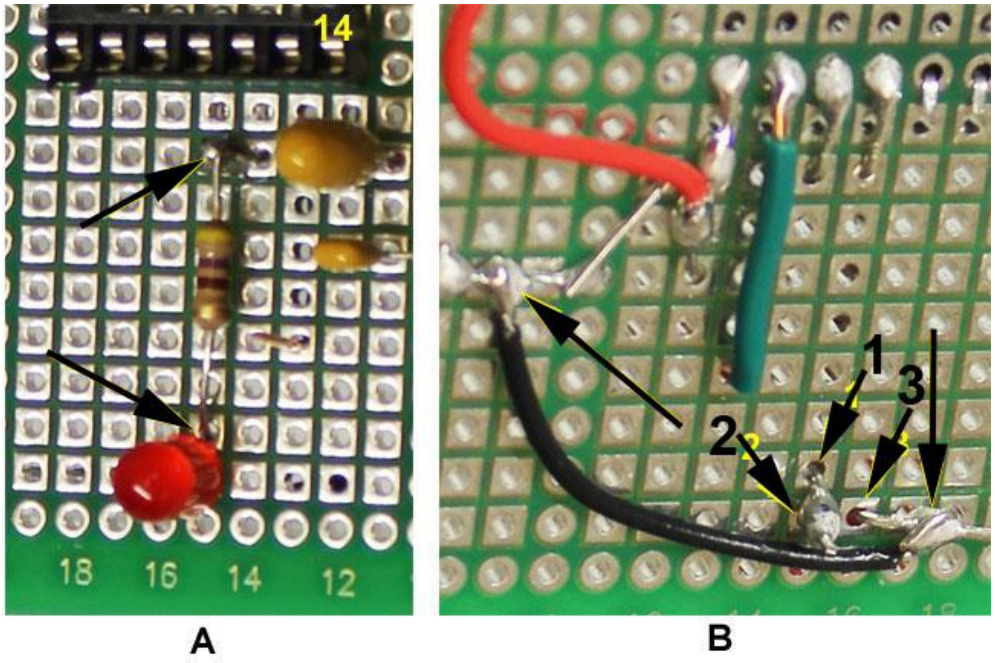

Figure 9

26. Prepare a green 22 gauge solid wire as seen in Figure 10A. Strip the insulation off one end and insert the bare wire into the hole next to pin 10 of IC1 socket. Flip the board over and bend the wire over on top of pin 10 (top arrow, column 16, Figure 10B). Then solder the wire to the pin.

27. Prepare a black 22 gauge solid were as seen in Figure 10B (arrows). Solder one end to pin 9 of IC1 socket. Solder the other end to negative power bus (Figure 10B).

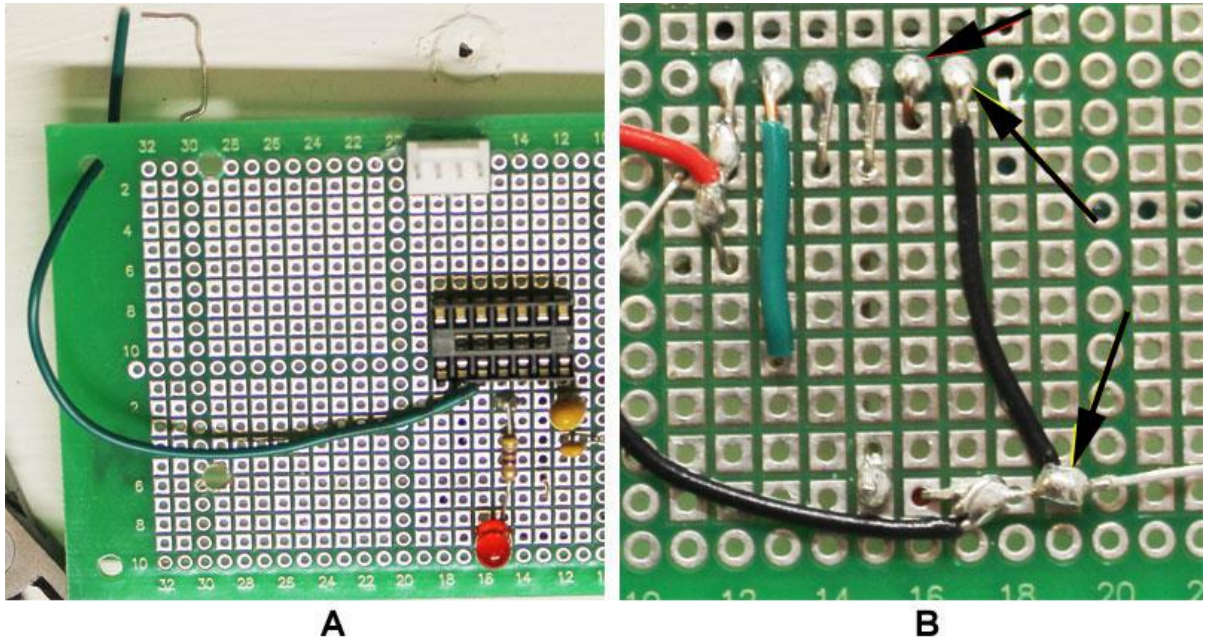

Figure 10

28. Prepare a bare wire in a tight U-shape and insert it into the hole next to pin 1 of IC1 socket and the hole adjacent to it on the left (Figure 11A, arrow 2). While holding the wire in place, turn over the board. Bend the wire end over to touch pin 1 and then solder it to the pin (Figure 11B, arrow 1).

29. Insert variable resistor R8 (10 kΩ, 25 turn) into the board as seen in Figure 11A. The middle wire should be in the same row as the U-shaped wire of step 28. Bend the outside wires of R8 slightly and then turn over the board. Bend the free end of the U-shaped wire around the middle wire of R8, trim any excess and solder the connection (arrow 3, Figure 11B).

30. Insert R9 (22 kΩ) into board as seen in Figure 11A (unnumbered arrows). Resistor wire on left should be in same column as the wires of R8. The other end of the resistor should be in the same column of holes as pin 2 of IC1 socket.

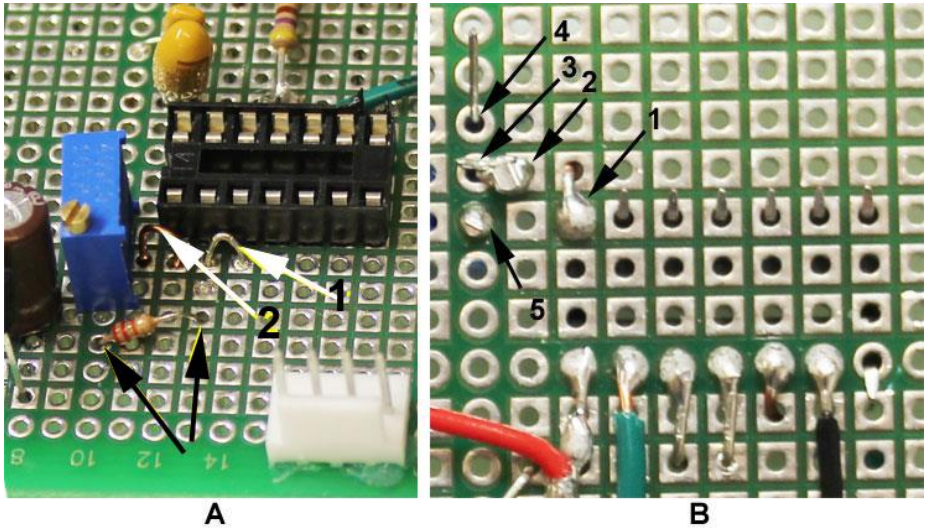

Figure 11

31. Turn the board over. The resistor wires are marked by arrows 1 and 2, Figure 12. Bend the wire at arrow 1 around the top wire of R8, trim excess and solder the connection.

32. Prepare a bare wire U-shaped to insert into holes next to pins 2 and 3 of IC1 socket (arrow 1 in Figure 11A).

33. Turn board over and bend wires of U-shape over to touch pins 2 and 3. Then solder the wire ends to the pins (Figure 12, arrows 3 and 4).

34. Bend the resistor wire marked with arrow 2 in Figure 12 so that it touches the soldered connection to pin 2, trim excess wire and solder in place as seen in Figure 12 (arrow 3).

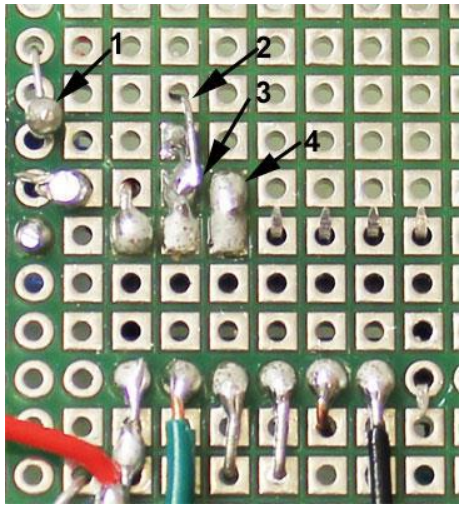

Figure 12

35. Insert capacitor C6 as seen in Figure 13A. The wires should be in the same column as pin 1 of IC1 socket (column 12 of photo), one wire next to the U-shaped wire, the other wire in the second row from the edge of the board (capacitor wires marked with arrows).

36. Turn the board over. Bend the capacitor wire closest to the socket over to touch the soldering of pin 1 of the IC1 socket. Trim the excess wire and solder in place (arrow 3, Figure 13B).

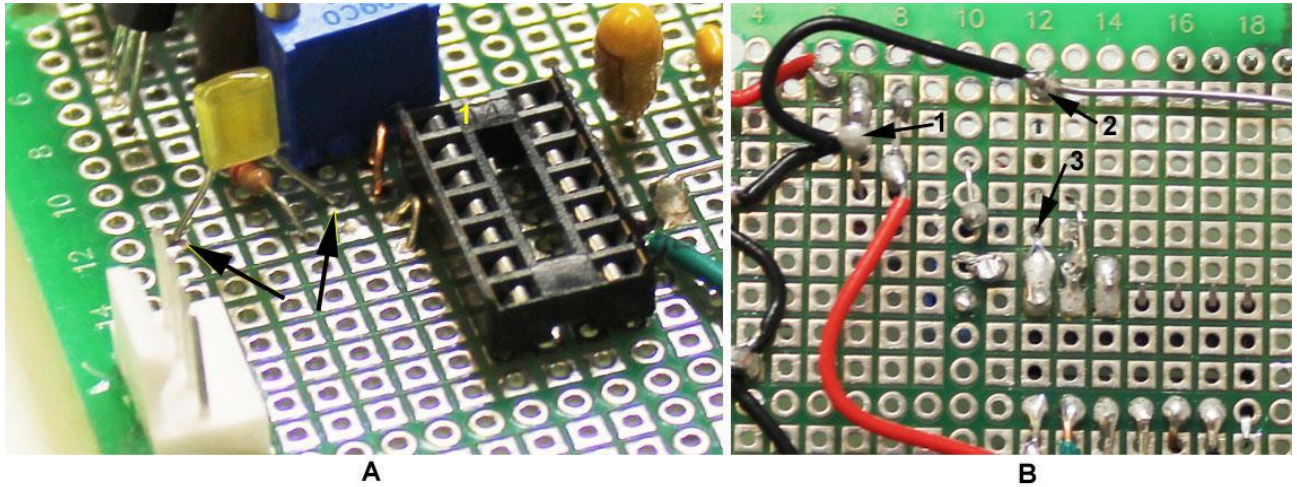

Figure 13

37. Bend the free wire of the capacitor over to the right (it will function as a continuation of the negative power bus). Prepare a black 22 gauge solid wire to connect between arrows 1 and 2 in Figure 13B and solder the ends in place. You have now finished soldering C6 to the board.

38. Insert R10 (470 Ω) into the board as seen in Figure 14A. One wire should be next to pin 4 of IC1 socket. The other wire should be in a hole 2 columns to the right of the edge of the socket (Figure 14A).

39. Turn the board over. Bend the resistor wire over so that it touches pin 4 of the socket and trim the excess. Then solder the wire to pin 4 (arrow 1 of Figure 14B).

40. Prepare two short pieces of black 22 gauge

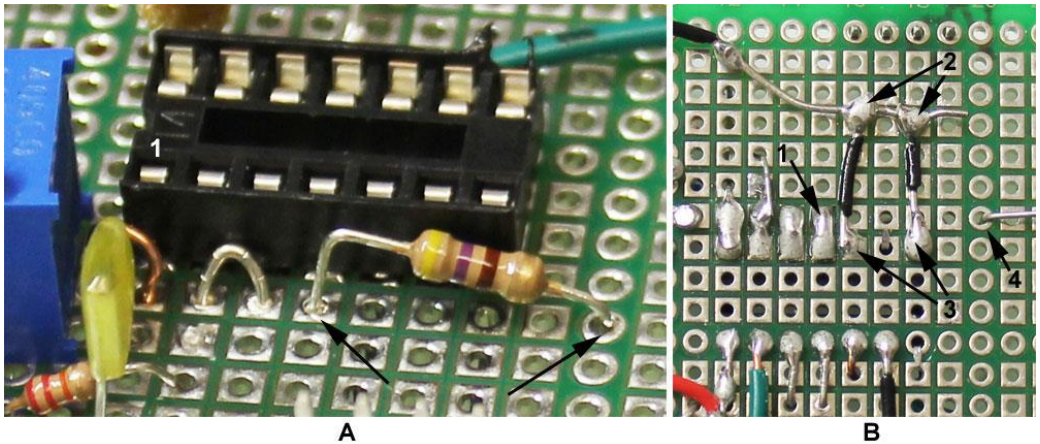

Figure 14

solid wire as seen in Figure 14B. One end of each piece should be soldered to the negative power bus (arrows marked 2 in Figure 14B). Make sure the negative power bus wire is moved down, away from the pins of the 4 pin header. The other ends of the black wires should be soldered to pins 5 and 7 of IC1 socket (arrows marked 3 in Figure 14B).

41. Insert variable resistor R11 (1 kΩ, one turn) into the board as seen in Figure 15A. The wire closest to the socket should be in the same column of holes that contains the free wire of resistor R10 (you can barely see R10 in the photo, marked with arrow 3).

42. Prepare a short piece of green 22 gauge solid wire, strip the insulation off one end and insert the bare wire into a hole in the same column of holes as the middle wire of R11 (Figure 15A, arrow 1).

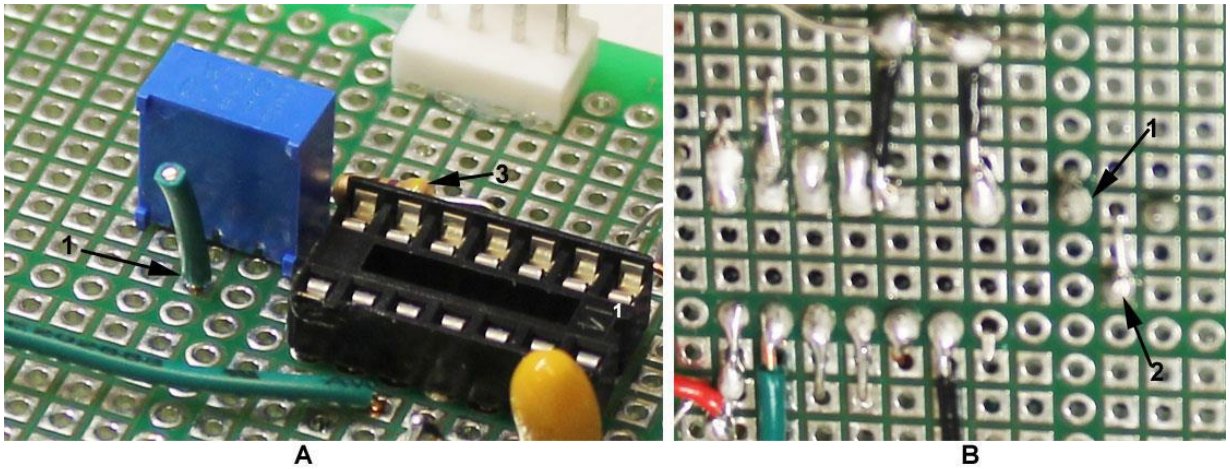

Figure 15

43. Turn the board over. Bend the wire of R10 around the wire of R11, trim excess, and solder (arrow 1, Figure 15B)

44. Bend the middle wire of R11 around the green wire inserted from top of board, trim excess, and solder (arrow 2, Figure 15B).

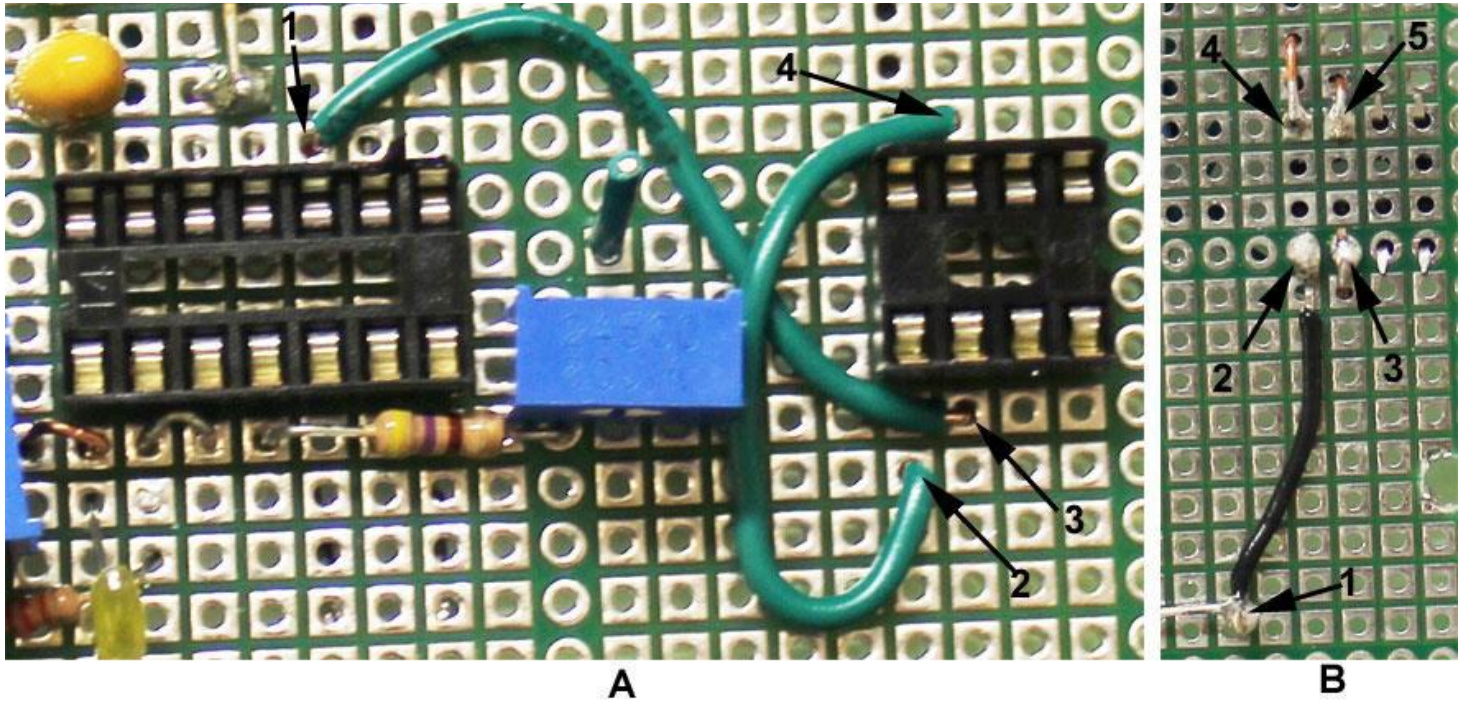

Figure 16

45. Insert the 8 pin DIP socket for IC3 in to the board (see Figure 16A). The pins of the socket should be inserted into the same rows of holes as the socket for IC1. There should be 7 columns of holes between the two sockets. The notch of the socket for IC3 should be facing to the right as seen in Figure 16A.

46. Turn the board over and bend the pins of the socket as seen in Figure 16B.

47. Trim the green wire connected to pin 10 of IC1 socket (arrow 1, Figure 16A) and strip the free end to fit into the hole next to pin 6 of the IC3 socket (arrow 3, Figure 16A).

48. Prepare a green 22 gauge solid wire that will connect pins 3 and 5 of IC3 socket (Figure 15A, arrows 2 and 4). Strip the ends of the wire and insert the bare wire ends into the holes next to pins 3 and 5.

49. Turn the board over. Bend the ends of the green wires over to touch their respective pins of IC3, trim excess and solder to pins (Figure 16B, arrows 3, 4 and 5).

50. Prepare a black 22 gauge solid wire to fit between the negative power bus and pin 4 of IC3 (arrows 1 and 2 of Figure 16B). Solder the wire in place.

51. Prepare a green 22 gauge solid wire to connect pins 2 and 6 of IC3 (arrow 3 and numeral 4, Figure 17A). Trim the ends of the wire and insert them into the holes next to pins 2 and 6 as seen in Figure 17A.

51a. Turn the board over. Bend the wires to touch pins 2 and 6 and solder (Figure 17B, arrow 2 and arrow 1)

52. Insert R4 (2.2 kΩ) into board as seen in Figure 17A. The wires of the resistor are marked with arrows number 1 and 2. The resistor wire next to the socket is to be connected to pin 7.

53. Turn the board over. Bend the wire of R4 over pin 7 and solder (arrow 3 in Figure 17B).

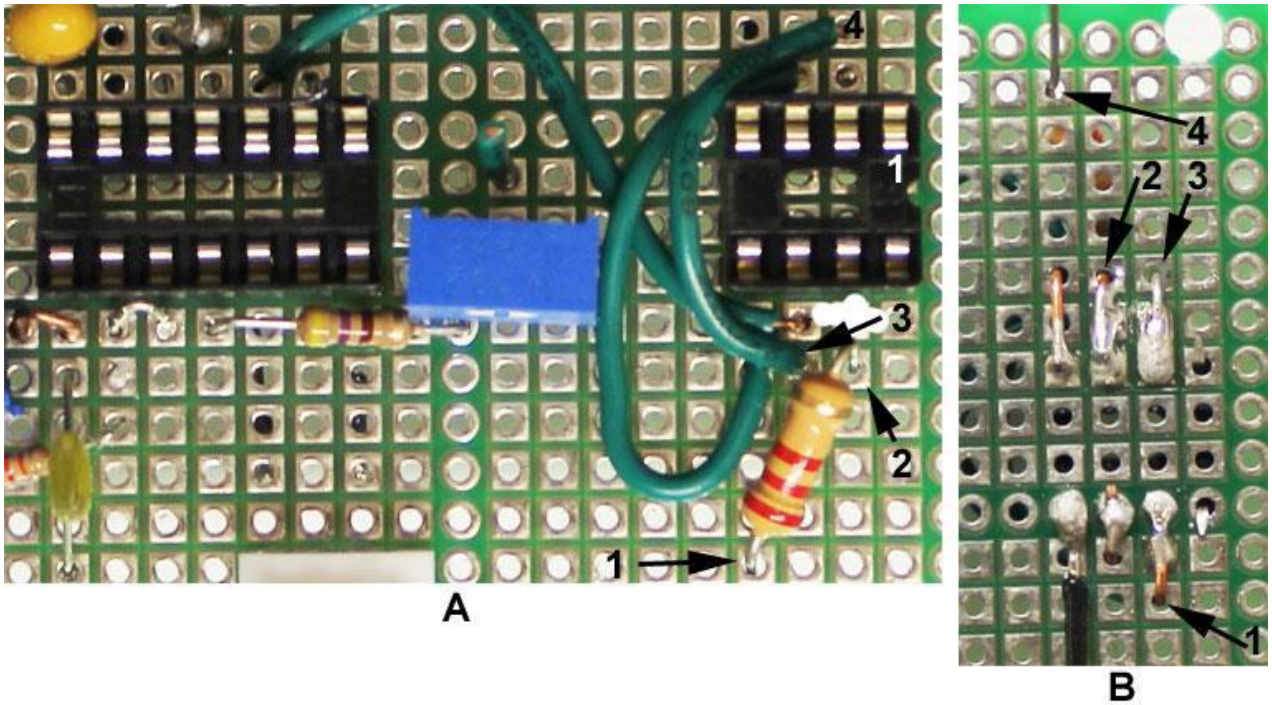

Figure 17

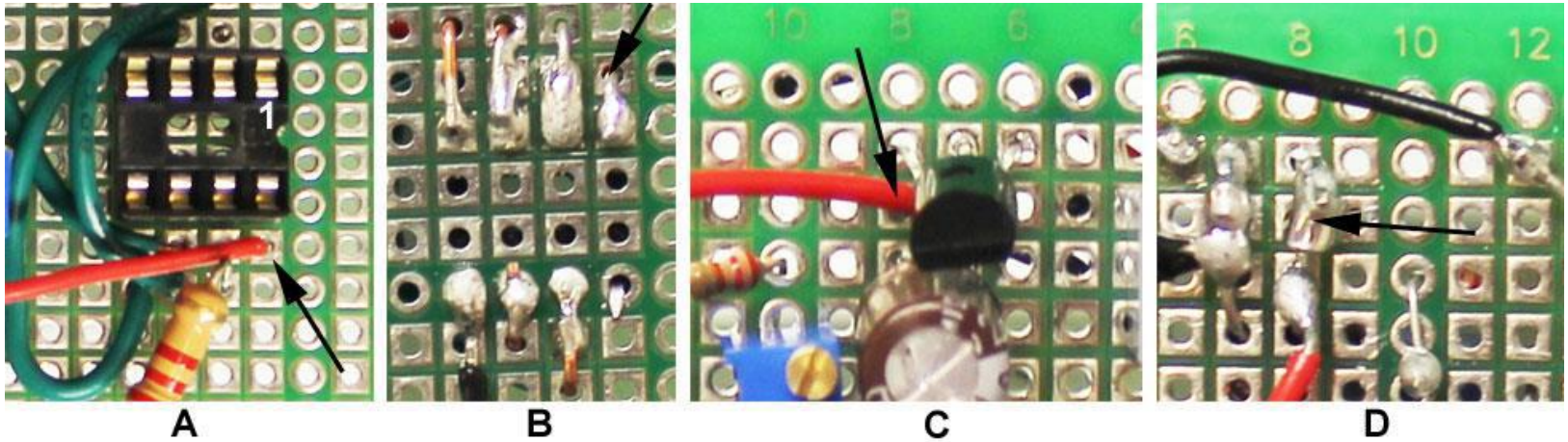

Figure 18

54. Prepare a red 22 gauge solid wire to connect the positive output of the voltage regulator to pin 8 of the socket for IC3. The connection point at the socket is marked by an arrow in Figure 18A. Insert the other end of the red wire into the hole just below the left wire of the voltage regulator as seen in Figure 18C (marked by arrow).

55. Turn the board over. Bend the wire over to touch pin 8 of the socket for IC3 (arrow in Figure 18B). Trim any excess wire and solder to pin 8.

56. Bend the other end of the red wire around the output wire of the voltage regulator and solder (marked by arrow in Figure 18D).

57. Insert R5 (2.2 kΩ) into the board as seen in Figure 19A (the wires are marked by black arrows). One of the wires should be next to pin 1 of socket for IC3.

58. Turn the board over. Bend the resistor wire over to touch pin 1 of the socket. Trim any excess wire and then solder the wire to pin 1 (see arrow pointing to pin 1 in Figure 19B).

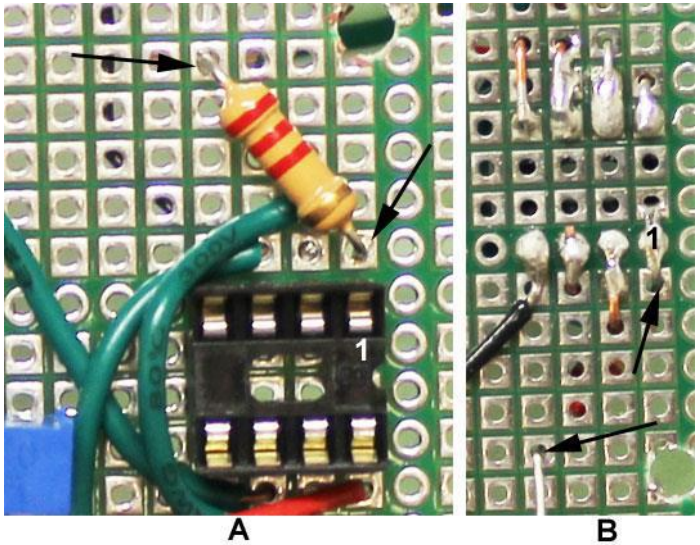

Figure 19

59. Insert R2 (2.2 kΩ) and R3 (2.2 kΩ) into the board as seen in Figure 20A (the two resistors on the right side of the photo).

60. Prepare a green 22 gauge solid wire as seen in Figure 20A. Strip the insulation off each end of the wire. Insert one end in a hole in the same column as pin 3 of the socket for IC3. Insert the other end in a hole next to the wires of R2 and R3 as seen in Figure 20A.

61. Turn the board over. In Figure 20B pin 3 is labeled. Bend the wire in that column of holes and solder it to the solder line that connects to pin 3.

62. Now connect the wires between R2 and R3 (three wires next to each other marked by three arrows in Figure 20B. Solder these three wires together (these are the wires in holes of rows 9 and 10, the right-most two columns as seen in Figure 20B).

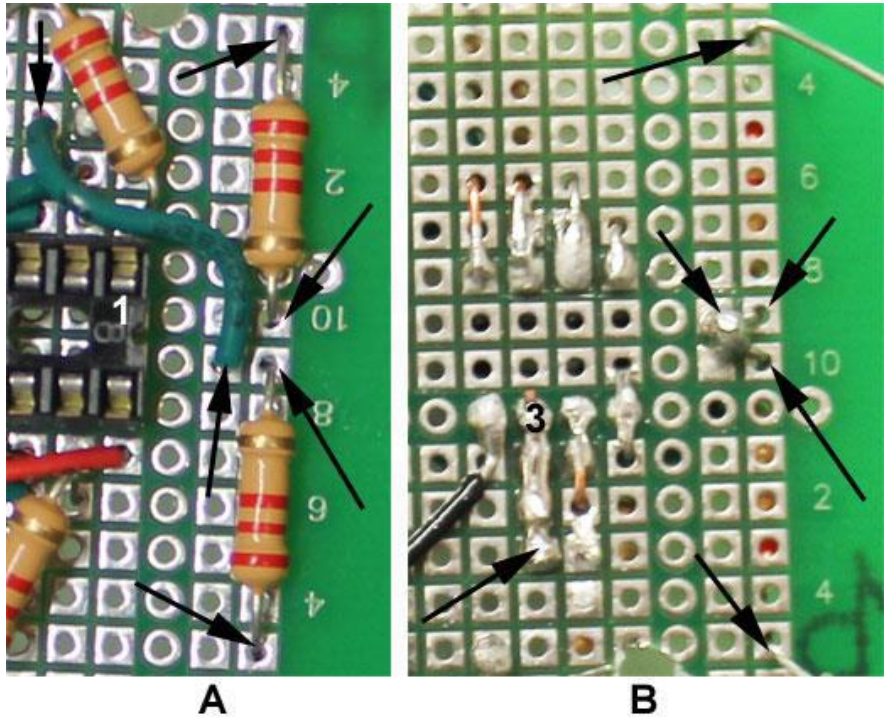

Figure 20

63. Insert transistor Q2 into board as seen in Figure 21A. The transistor has an orientation requirement. Make sure the flat face of the transistor is facing the IC3 socket. The middle wire of Q2 should be in the same column as the free end of R5 (Figure 21A).

64. Turn the board over. Wrap the center wire of Q2 around the free wire of R5. Then solder the connection (arrow in Figure 21B).

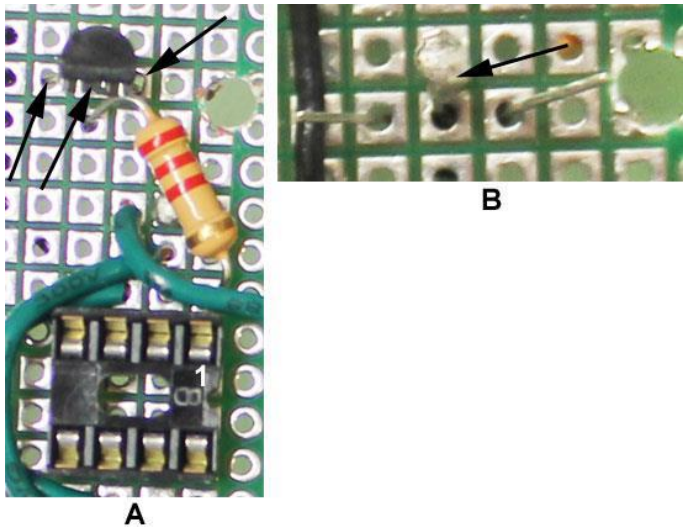

Figure 21

65. Prepare a green 22 gauge solid wire to connect from the 4 pin header to the output of Q2. Figure 22A shows the connection of the green wire to Q2 (arrow on right side).

66. Solder the other end of the green wire to the pin on the left side of the 4 pin header as seen in Figure 22B (marked by an arrow, below number 16).

67. Prepare a red 22 gauge solid wire to connect from the 4 pin header to the input of Q2. Solder one end of the wire to the second pin from the right (the pin under the number 18 in Figure 22B).

68. Solder the other end of the red wire to the input of Q2 (left arrow in Figure 22A).

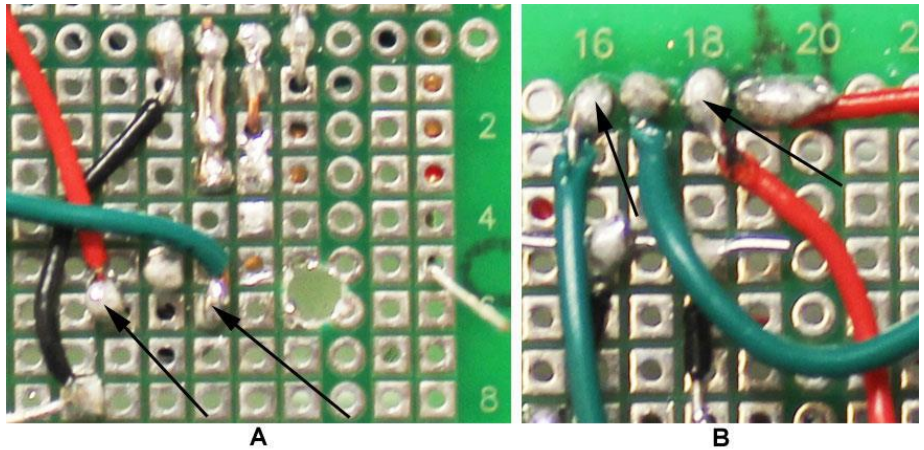

Figure 22

69. Insert transistor Q1 into the board as seen in Figure 23A. This transistor has an orientation requirement. The flat face should be pointing to the right as seen in Figure 23A. The middle wire of Q1 should be in the same row of holes as the free end of R4.

70. Turn the board over. Bend the middle wire of Q1 around the wire of resistor R4, trim the excess wire and solder (the arrow on far right of Figure 23B).

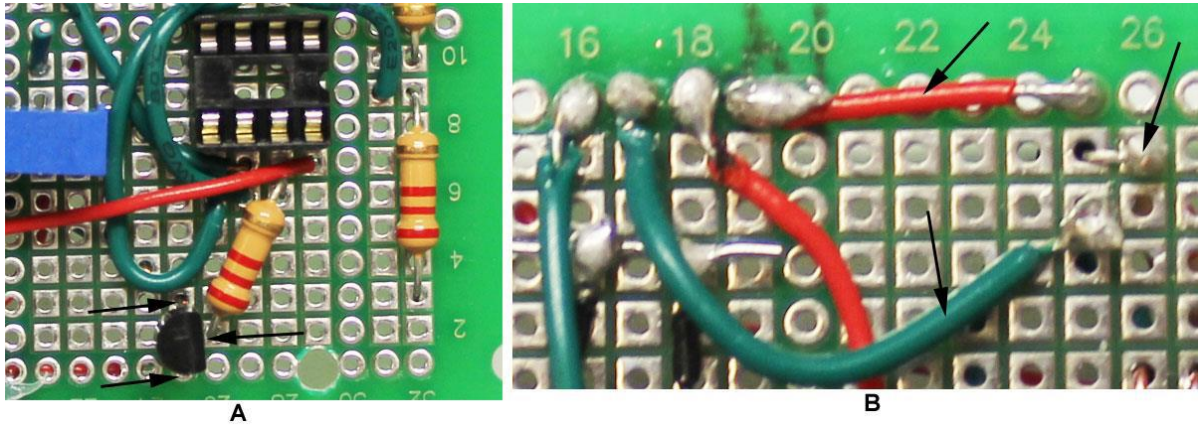

Figure 23

71. Prepare a green 22 gauge solid wire to connect from the 4 pin header to the input of Q1 (Figure 23B, lower wire marked with arrow). Solder one end of the green wire to the header pin second from left (column 17 in Figure 23B). Solder the other end of the green wire to the input wire of Q1 (Figure 23B).

72. Prepare a red 22 gauge solid wire to connect from the 4 pin header to the input wire of Q1. Solder one end to the header pin on the right as seen in Figure 23B (top horizontal wire in photo). Solder the other end to the input wire of Q1.

73. Prepare a red 22 gauge solid wire to connect the positive power bus to the free end of R3 (see arrows marking ends of red wire in Figure 24 – near top of photo). Solder the red wire to its connections.

74. Prepare a black 22 gauge solid wire to connect the negative power bus to the free wire of R2 (see arrows marking the ends of black wire in Figure 24 – near bottom of photo). Solder the black wire to its connections.

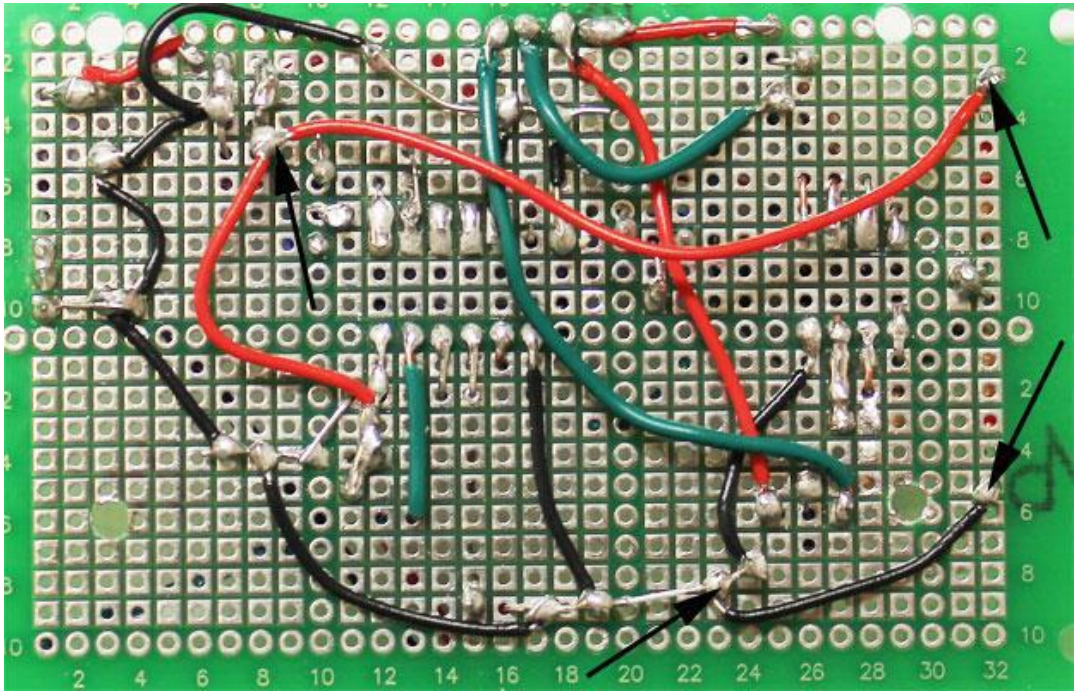

Figure 24

75. Prepare a green, a red and a black wire to connect to the IR receiver (IC2). These wires MUST BE STRANDED WIRE. Cut them all to about 4 inches length and strip the insulation off the ends.

76. Wrap the black wire around the wire next to the 2 pin header as seen in Figure 25A. Solder this connection. Apply a small amount of solder to the other end of the black wire and bend it into a U-shape so that it can be connected to IC2.

77. Wrap the green wire around the wire in the same column as pin 13 of the socket for IC1. Solder this connection. Apply a small amount of solder to the other end of the green wire and bend it into a U-shape so that it can be connected to IC2.

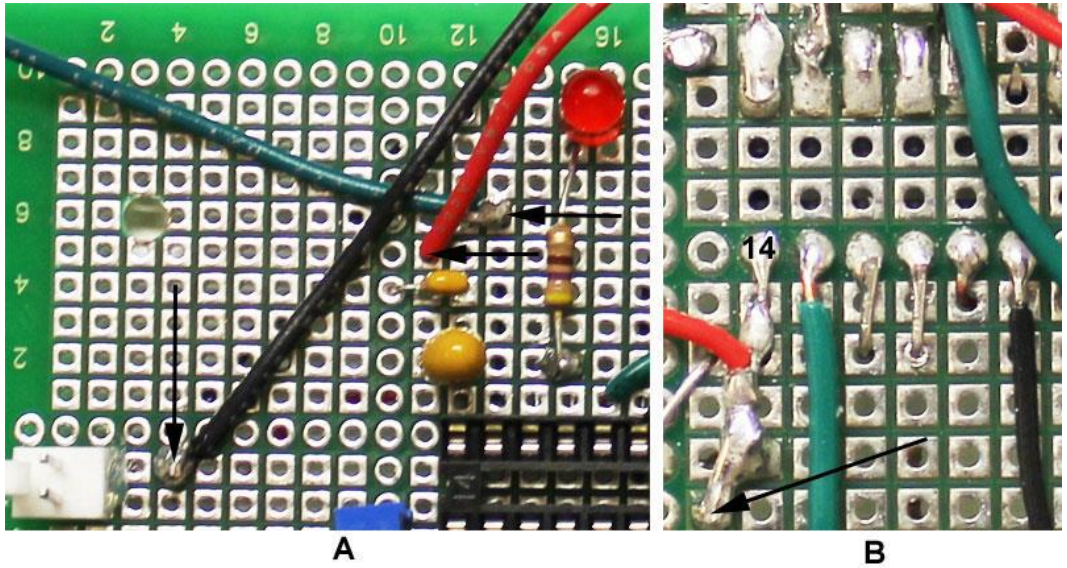

Figure 25

78. Insert one end of the red wire into the board as seen in Figure 25A. Turn the board over. Bend this wire around the line of wires soldered to pin 14 and solder (arrow in Figure 25B).

79. Prepare a green and black wire from 22 gauge STRANDED wire, each about 3 inches long. Strip the insulation off the ends of these wires. Connect one end of the green wire to the wire next to R11 and solder (top arrow in Figure 26A).

80. Insert one end of the black wire into the board as seen in Figure 26A (wire at bottom of photo).

81. Turn the board over. Solder the wire to the negative power bus as seen in Figure 26B.

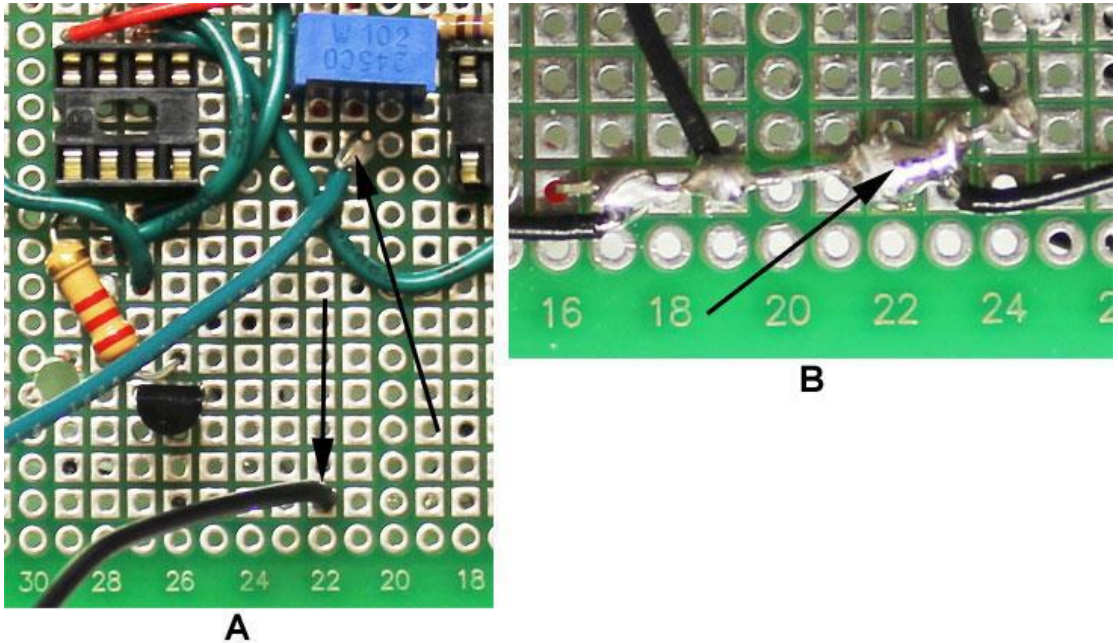

Figure 26

82. Insert capacitor C7 into board as seen in Figure 27A (arrows). It should be in the same column of holes as pin 8 of socket for IC3.

83. Turn board over. Bend capacitor wire closest to the socket to touch the soldering line to pin 8, trim excess wire, and solder to pin 8 (arrow in lower right corner of Figure 27B).

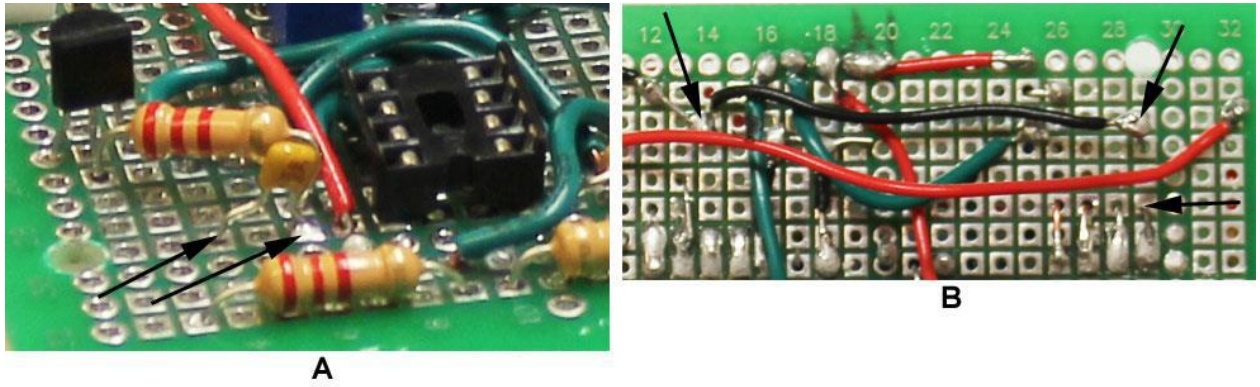

Figure 27

84. The free end of C7 must be connected to the negative power bus. Prepare a black 22 gauge solid wire (see Figure 27B, the black wire marked with arrows at its ends). Solder the wire to the capacitor wire and the negative power bus.

85. Mount the plastic L bracket for IC2 to the forward right corner of the board as seen in Figure 28. This bracket has three small holes for the three wires of IC2. Bend the three wires of IC2, IR receiver module, to form a right angle and insert the wires through the holes in the L bracket. If you have bent the wires correctly, the black lens of IC2 will be facing away from the board. IF YOU ARE UNSURE ABOUT THE PLACEMENT OF IC2, THEN ASK AN ADULT.

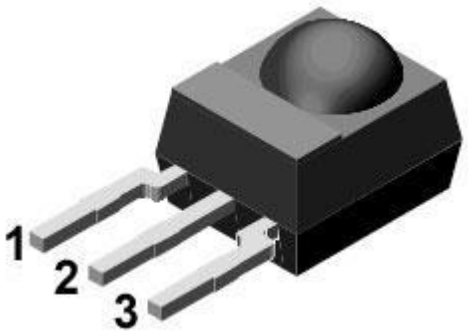

86. The image above is a drawing of IC2 with its pins numbered. The green wire is soldered to pin one, the black wire to pin 2 and the red wire to pin 3. Bend the bare ends of the wires into U-shapes and tighten them on the proper pins of IC2. Then solder the connections (Figure 28).

87. Solder capacitor C3 to pins 2 and 3 of IC2 (Figure 28).

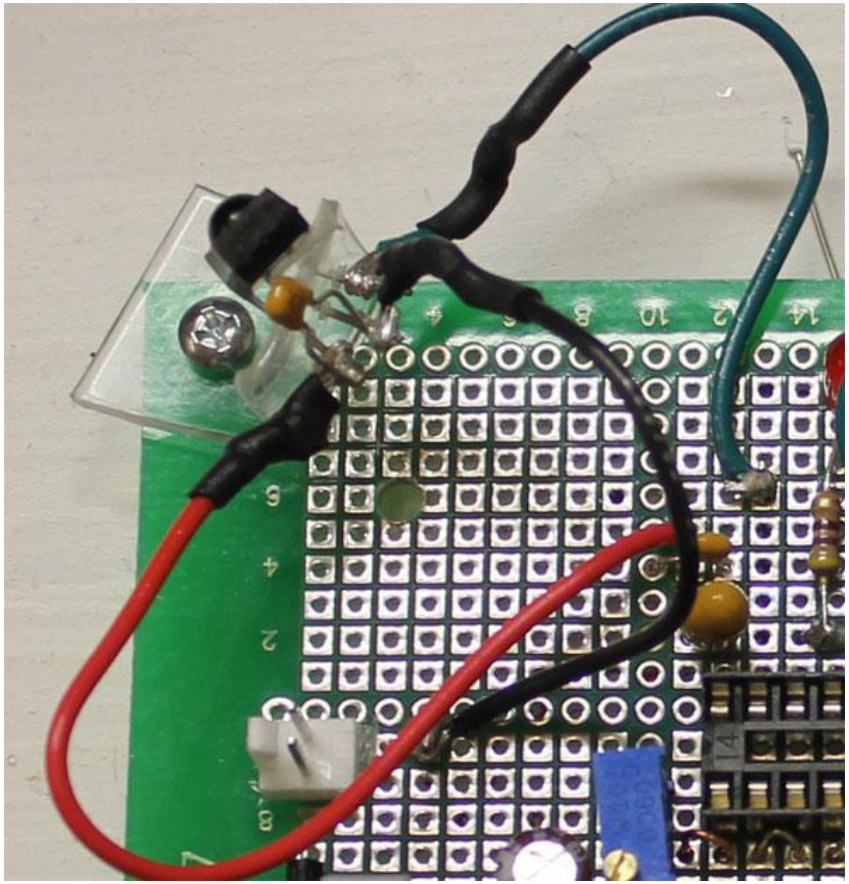

Figure 28

88. Make sure that there are no shorts between the pins of IC2. It may be a good idea to place small pieces of electrical tape between the pins to prevent shorts.

89. Mount the remaining L bracket to the left forward corner of the board (Figure 29). This bracket has two small holes for the wires of the IR emitting diode D5. Insert the diode into the bracket. Bend the green and black wire ends into U-shapes and tighten them to the proper wires of D5. The black wire should be connected to the short wire (cathode) and the green wire to the long wire (anode). Solder these connections.

90. Insert IC1 and IC3 into their proper sockets on the board. Make sure the notches of socket and IC match up. CONGRATULATIONS! You have finished wiring your board. Ask an adult to check your wiring before installing the board on the line following robot.

91. Before you mount your IR add-on module on the robot, you need to check the function of the board. In order to do this, you will temporarily connect a 9 volt battery to the board, in the same manner you did in step 11.

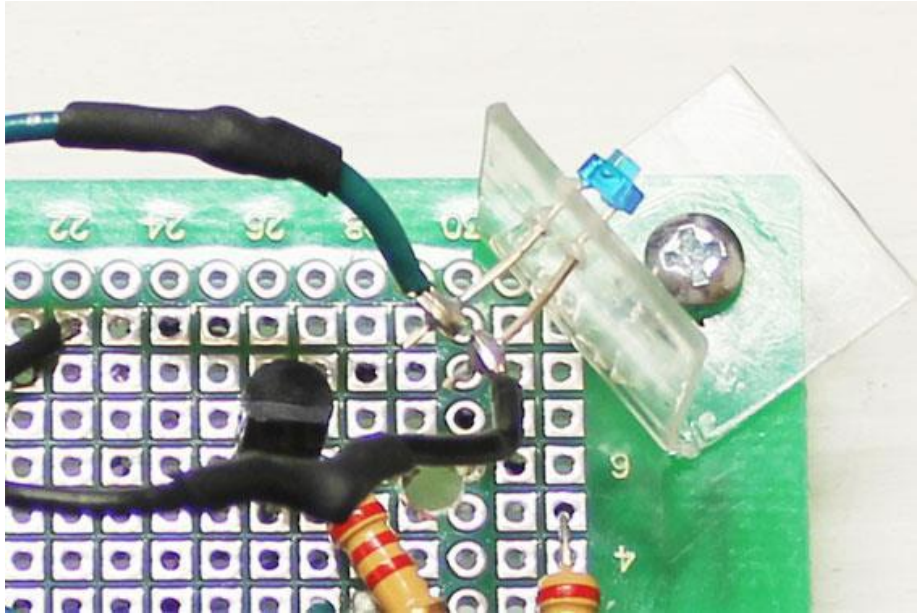

Figure 29

92. With power applied to your board, you will now adjust R8 so that the pulse rate of D5 is 38 kHz. This can be done using an oscilloscope or a meter that has a frequency function. I have both of these instruments and can show you how to connect them to your board so that you can measure the pulse rate of D5.

93. After your IR emitter is pulsing at 38 kHz, you can now check some of the functions of the board. When the IR receiver module is detecting a 38 kHz IR pulse, the red LED (D6) should be glowing. You could think of it as the stop light on your robot. Since your IR emitter is not pointing in the direction of the IR receiver, the receiver may not be detecting enough IR to turn on the red LED. If that is the case, hold a piece of white paper or your hand in front of the robot and the IR light from the emitter will reflect over to the receiver. Then the red LED light should glow. If you cannot get the red LED light to glow, then you will need to troubleshoot your board. You should also be able to turn off the red LED by blocking the IR pulses. You may or may not need to cover the IR emitter in order to turn off the red LED. You must be able to turn the red LED on and off by manipulating the IR from the emitter. If you cannot do this, then you will need to troubleshoot your board.

94. Assuming your IR add-on module is functioning properly, it is time to mount it on the robot. The IR add-on board is mounted directly above the main PCB of the robot. You will be provided with mounting screws and spacers. Ask Mr. La Favre for mounting instructions. You will also need to connect the two wiring cables from the main PCB to your add on module (ask Mr. La Favre for instructions).

95. Once your add-on module is mounted and connected electrically to the robot, you are ready to road test the robot. There are three adjustments you can make that can alter the performance of the add-on module. Both L brackets (for IR emitter and IR receiver) can be rotated to adjust the direction they point. That is why the wires connecting to these components are stranded instead of solid. If you keep bending a solid wire, it can break. The third adjustment you can make is the brightness of the IR emitter. This will be a little more challenging than adjusting the brightness of a red LED, where you can actually see the light (remember that IR is invisible to humans). The brightness of the IR emitter is adjusted with R11.

Your adjustments to the add-on module will require track testing with at least two robots. The adjustments are made so the robots perform as they should at an intersection. At an intersection, the robot on the right should stop before entering the intersection, so that the robot on the left can clear the intersection without a collision. The performance of the robots will be affected by the direction in which the IR emitters and receivers are pointing as well as the amount of light from the emitter. The emitter must be bright enough to stop the other robot far enough away from the intersection to avoid a collision. On the other hand, if the IR emitter is too bright, it may cause another robot to stop at places on the track that are not near intersections. These adjustments must be done by testing on a track, by trial and error, until proper performance is achieved.

Parts List

Capacitors

C1 1.0 µF, film, 63 VDC Digi-key 3019PH-ND
C2 22 µF, 25 V, aluminum Digi-key 604-1052-ND
C3, C4, C7 0.1 µF, ceramic, 50 V Digi-key BC2665CT-ND
C5 10 µF, tantalum, 25 V Digi-key 399-3565-ND
C6 0.001 µF, film, 50 VDC Digi-key 493-3377-ND

Resistors (1/4 or 1/2 watt)

R2, R3, R4, R5 2,200 Ω Digi-key 2.2KH-ND **R10, R12** 470 Ω Digi-key CF14JT470RCT-ND
R8 10,000 Ω 25 turn trimmer pot Digi-key 3296W-1-103RLFCT-ND
R9 22,000 Ω Digi-key S22KQCT-ND
R11 1,000 Ω 1 turn trimmer pot Digi-key 3386W-1-102RLFCT-ND

Diodes

D1 Schottky diode 20 volt, 1 amp Digi-key 1N5817-TPCT-ND
D6 red LED Digi-key 160-1087-ND
D5 IR Emitter 950 nm (Vishay part number CQY36N) Digi-key 751-1026-ND

Transistors

Q1, Q2 PNP bipolar, TO-92 package, 500 mA (Fairchild Semiconductor PN2907A) Digi-key PN2907ABUFS-ND

Integrated Circuits

IC1 Hex Schmitt-Trigger Inverter, 14 pin DIP (Texas Instruments, part number SN74AC14) Digi-key 296-4301-5-ND
IC2 IR Receiver Module, 38 kHz (Vishay, part number TSSP4038) Digi-key TSSP4038-ND
IC3 LM393 dual voltage comparator, 8 pin DIP Digi-key LM393NGOS-ND
VR 5 volt linear voltage regulator 0.1 amp, TO92 package Digi-key LM78L05ACZFS-ND